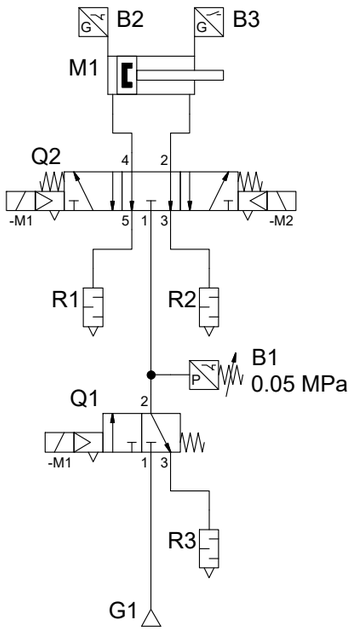

Parts list

Pos....	Identifi...	Description
1	B1	Pressure switch
2	B2	Limit switch
3	B3	Limit switch
4	G1	Operation pressure
5	M1	Double-acting drive
6	Q1	3/2-way valve
7	Q2	5/3-way valve
8	R1	Silencer
9	R2	Silencer
10	R3	Silencer

Safety subfunction

STO - safe torque off — up to category 1, up to PL c can be reached

PUS - Prevention unexpected start-up — up to category 3, up to PL e can be reached

Block diagram

STO - safe torque off

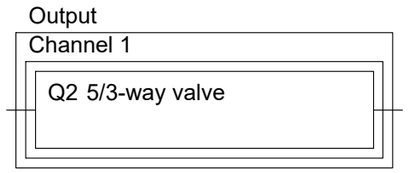

PUS - Prevention unexpected start-up

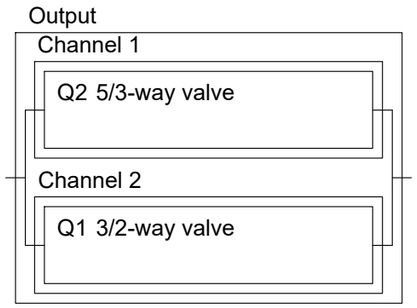

Q2
5/3-way valve
Diagnostic coverage DC=90%
Indirect monitoring
With positioning time monitoring by limit switches
(estimate according ISO 13849-1, table E.1)

Q1
3/2-way valve
Diagnostic coverage DC=90%
Indirect monitoring
With switching time monitoring by pressure switch
(estimate according ISO 13849-1, table E.1)

					Date	Name				
				Drawn			FESTO	Project	100384	Installation
				Seen				Page	Circuit	Location
No.	Modification	Date	Name	Release						Scale / Page 1 / of 1